MERCRUISER (350 MAG. BRAVO MPI(GEN+) GM 350 V-8 1996)
Serial Nbr Range: 0F602000 THRU 0K001500 ()

STARTER AND ALTERNATOR

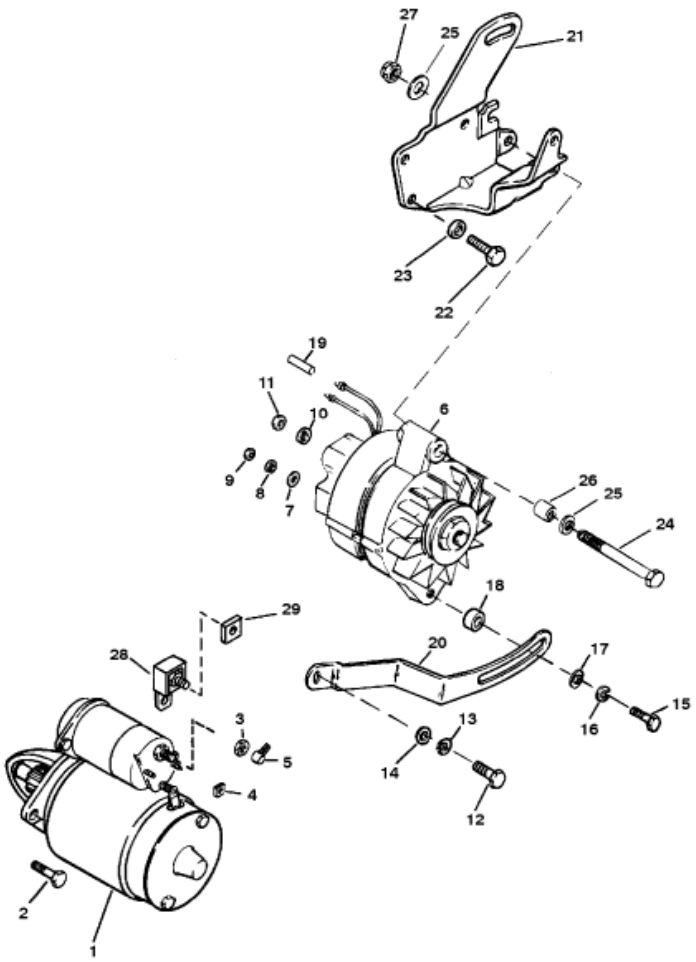

Parts List

Ref	Class	Part	Description	Qty	Comment	Footnote
1	50	806964A 3	STARTER MOTOR	1		
2	10	805343 2	SCREW	2		
3	11	806949	NUT (8MM)	1		
4	11	40021 1	NUT (5MM)	1		
5	85	79695	BOOT	1		
6		805884T	ALTERNATOR	1		
7	12	96457	PHENOLIC WASHER	1		
8	13	26996	LOCKWASHER	1		
9	11	79989	NUT (10-24)	1		
10	13	26992	LOCKWASHER	1		
11	11	94330	NUT (1/4-20)	1		
12	10	26487	SCREW	1		
13	13	35048	LOCKWASHER	1		
14	12	34714	WASHER	1		
15	10	29198	SCREW	1		
16	13	39107	LOCKWASHER	1		
17	12	26168	WASHER	1		
18	23	52095	SPACER	1		
19		57908 11	TUBING	2		
20		85013T	BRACE	1		
21		15083T	BRACKET	1		
22	10	37612	SCREW (1-1/4 IN.)	2		
23	12	20553	WASHER	2		
22	10	34353	SCREW (1 IN.)	1		
23	12	20553	WASHER	1		
24	10	56743	SCREW	1		
25	12	20553	WASHER	2		
26	23	33186	BUSHING	1		
27	11	23161	NUT	1		
28	88	79023A91	FUSE ASSEMBLY (90 AMP)	1		
29	11	21825	NUT	1		